MEGA.DSS

MEGA DOUBLE SWIVEL SHACKLE

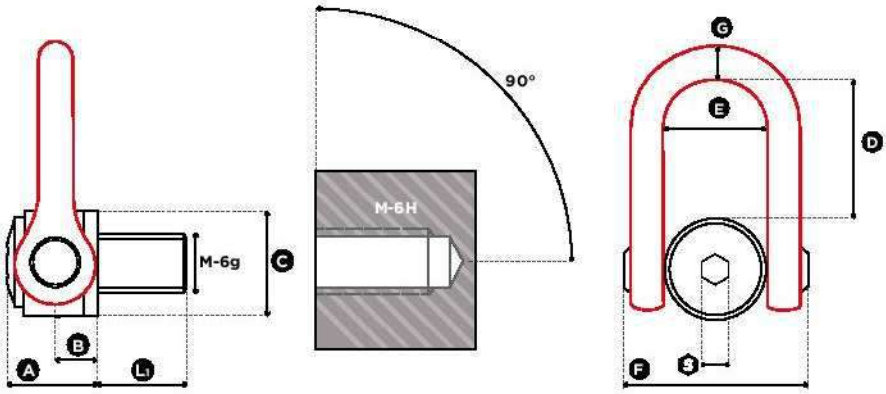

1 in = 25.4 mm

Reference	Diameter	SF 5:1 WLL (t)	SF 4:1 WLL (t)	Standard L_1 (mm)	Torque (Nm)	S (mm)	A (mm)	B (mm)	C (mm)	D (mm)	E (mm)	F (mm)	G (mm)	Weight (kg)
MEGA.DSS M 64 UP	M 64 (x6)	**26,00**	**33,00**	100	600	36	127	64	140	195	143	278	69	42,0
MEGA.DSS M 72 UP	M 72 (x6)	**28,00**	**35,00**	110	700	36	127	64	140	195	143	278	69	43,0
MEGA.DSS M 72x4 UP	M 72 (x4)	**28,00**	**35,00**	110	700	36	127	64	140	195	143	278	69	43,0
MEGA.DSS M 80 UP	M 80 (x6)	**32,00**	**40,00**	120	800	36	127	64	140	195	143	278	69	44,5
MEGA.DSS M 90 UP	M 90 (x6)	**36,00**	**45,00**	135	900	36	127	64	140	195	143	278	69	46,5
MEGA.DSS M 100 UP	M 100 (x6)	**48,00**	**60,00**	150	1000	36	127	64	140	195	143	278	69	49,0